| 订单号 | | 台数 | |
|---|---|---|---|

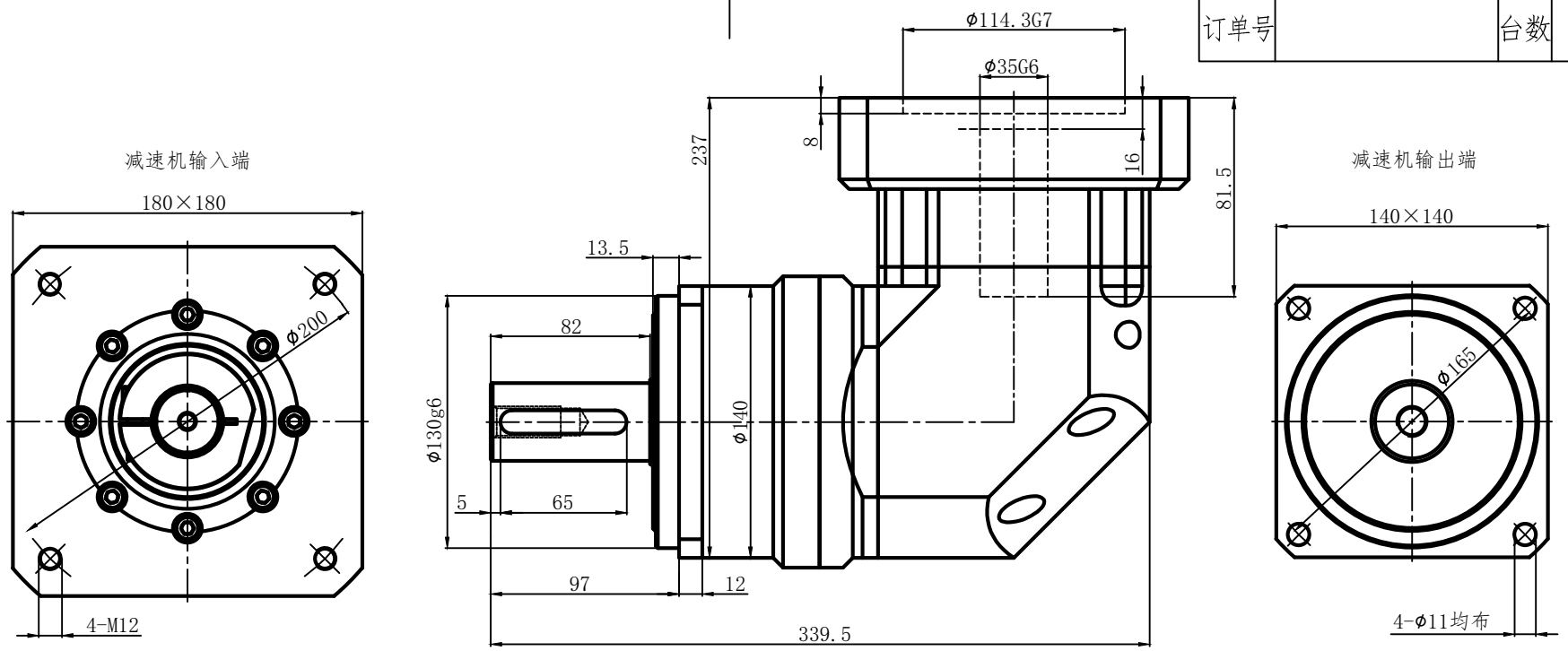


| 描　图 |
|---|
| |
| 校　描 |
| |
| 旧底图总号 |
| |
| 签　字 |
| |
| 日　期 |
| |

## 行星减速机技术参数
## Technical parameters of planetary reducer

| 减速比 Reduction ratio | 3 | 4 | 5 | 7 | 10 |
|---|---|---|---|---|---|
| 额定扭矩 Rated torque bureau | 270 | 350 | 420 | 600 | 400 |
| 最大扭矩 Maximum torque | 2.5倍额定扭矩 2.5 times rated output torque | | | | |
| 额定转速 Rated speed | 2000rpm | | | | |
| 最大转速 Maximum speed | 4000rpm | | | | |
| 容许径向力 Allowable radial force | 9400N | | | | |
| 容许轴向力 Allowable axial force | 4700N | | | | |
| 工作温度 Working temperature | -10° ~90° | | | | |

MODEL:TBR140

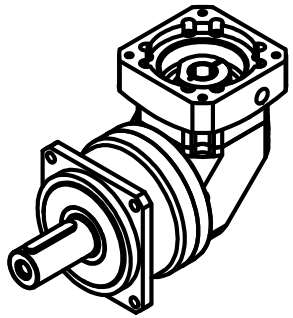

| 背隙 back lash | ≤10arcmin |
|---|---|

输出端(Output Terminal)

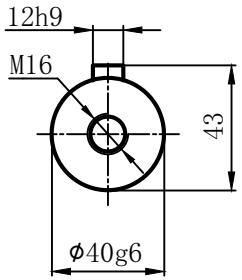


注意事项(Notice)

1. 本产品为精密零部件，应放置于干燥的地方保管.
   The product is a precise part and it should be stored in a dry place.
2. 装配前先应该检查电机与行星减速机各部位连接的尺寸,然后将减速机与电机自然连接.
   Before assembling,the size of the connection between the motor and the parts of the gearbox reducer should be checked, Then the reducer is naturally connected to the motor.
3. 禁止使用铁锤等重物击打,从而造成轴向力与径向力过大破坏轴承与齿轮.
   It is forbidden to hit with hammer or other heavy objects It can cause damage to bearings and gears.

| 标记 | 处数 | 更改文件名 | 签字 | 日期 |
|---|---|---|---|---|

| 设计 | | | |
|---|---|---|---|
| 校对 | | | |
| 核准 | | | |
| 标准 | | 日期 | |

行星减速机
Planetary Gearhead
Servobox

| 图样标记 | 重量 | 比例 |
|---|---|---|
| | | 1:1 |
| 共　张 | 第　张 | |

TBR140-L1尺寸图